INSTALLATION INSTRUCTIONS

MODELS C24EA3/EA5, HC24EA3/EA5, C24EO3/EO5 AND HC24EO3/EO5 ELECTRIC COUNTERTOP STEAMERS

ELECTRIC COUNTERTOP STEAMERS STACKING KIT

KIT # 00-857369-1 USED ON MODELS C24EA3/EA5, HC24EA3/EA5/LWE, C24EO3/EO5 AND HC24EO3/EO5						
Item	**Part No**	**Description**	**Qty**	**C24EA3/EA5 & HC24EA3/EA5**	**C24EO3/EO5 & HC24EO3/EO5**	**C24EA3/EA5 LWE**
1	857368-1	Delime Hose Bracket	1	X		X
2	844125-4	Grommet 1- 1/4" I.D.	1	X		X
3	557475	Hose 5/8" I.D. Silicone	5 FT	X		X
4	857367-1	Delime Label	1	X		X
5	SC-093-27	Mach Screw 10-24 X 7/8" SST Truss Hd	2	X	X	X
6	NS-038-13	Nut Lock SP 10-24 (Twin Serrated)	2	X	X	X
7	NS-015-11	Nut Hex 5/16-18 SST	8	X	X	X
8	WS-005-32	Washer, .344 X .688 X .062	8	X	X	X
9	SD-019-29	Drive Screw Type B 6-20	2	X		X
10	WS-029-45	Washer, .203 X .563 X .404	2	X		X
11	857363-1	Stack Plate Weldment (Top)	1	X	X	X
12	857364-1	Stack Plate Base Weldment	1	X	X	X
13	557845	Clamps Tension 24MM (Not Shown)	2	X		X
14	557477	Hose 1" I.D. Silicone	31"		X	X
15	8863T9	1 ½" Diameter Clamp	1	X	X	X

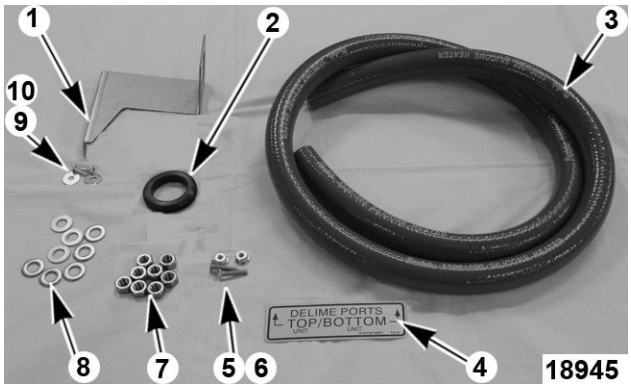

Fig. 1

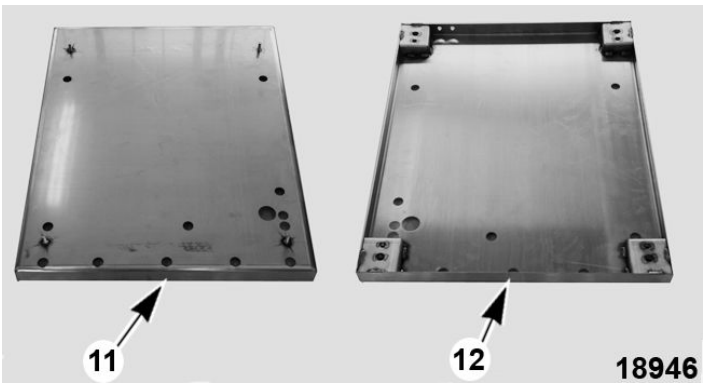

Fig. 2

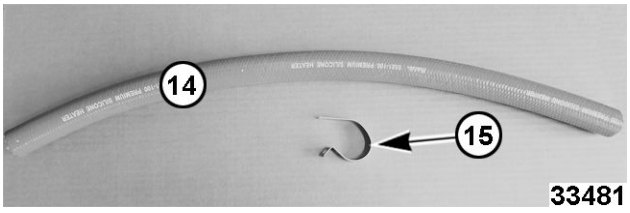

Fig. 3

General Notes

Legs and casters are accessories and must be ordered separately.

Stacking kit allows two electric countertop steamers to be stacked without a stand.

C24EA & HC24EA Series Steamers can be stacked on the C24EO & HC24EO.

Special Tools

- One inch (1") diameter hole cutter for stacking C24EA3/EA5 & HC24EA3/EA5 Steamers.

C24EA3/EA5 & HC24EA3/EA5 STACKING KIT INSTALLATION



⚠ WARNING

Disconnect the electrical power to the machine and follow lockout / tagout procedures.

1. Disconnect steamers from utilities if applicable.
2. Remove legs from both steamers and install legs (Fig. 4) or if applicable casters (Fig. 5), on bottom of stack plate base weldment.

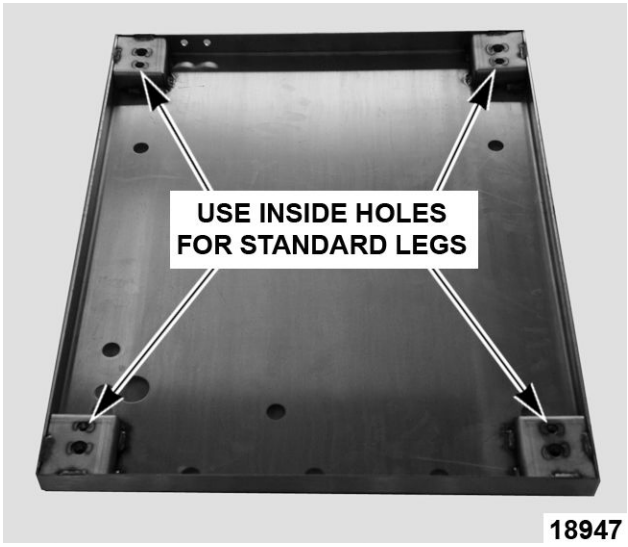

Fig. 4

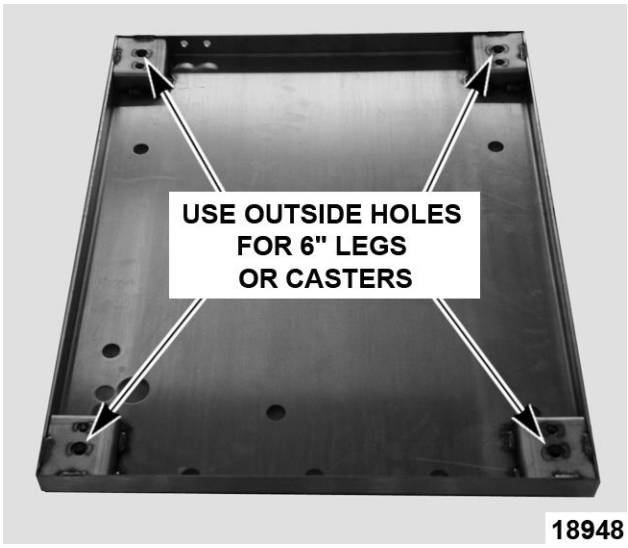

Fig. 5

3. Remove left and right side panels from both steamers.

NOTE: Fig. 6 shows right side panel.

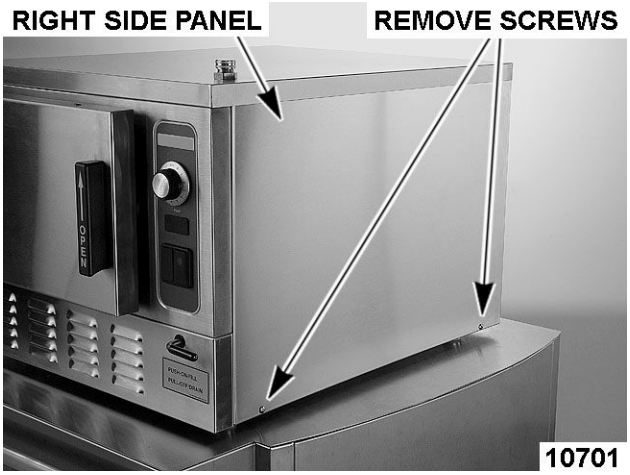

Fig. 6

NOTE: Step 4 for Delime port only applies to C24EA3/EA5 & HC24EA3/EA5 models.

4. Remove the delime port and hose from the steamer to be installed on bottom.
   - Save delime port to install in top steamer.
   - Discard hose and clamps.

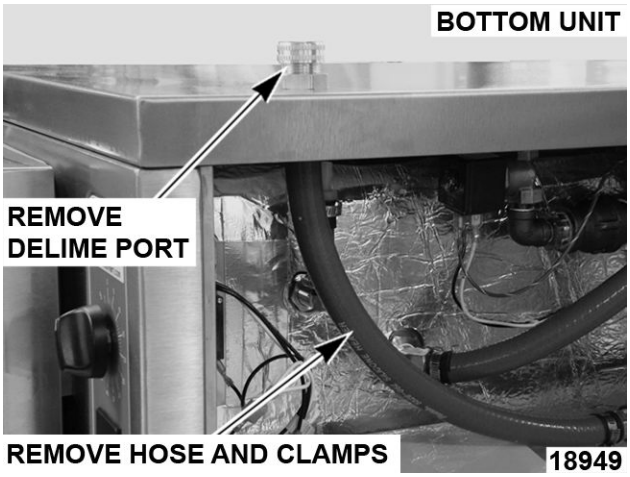

Fig. 7

5. Install bottom steamer on stack plate base weldment.
   A. Align, with rubber mallet, four weld studs on base weldment with leg holes in bottom panel.
6. Install four 5/16"-18 nuts and 11/32" washers to mount steamer to base weldment.

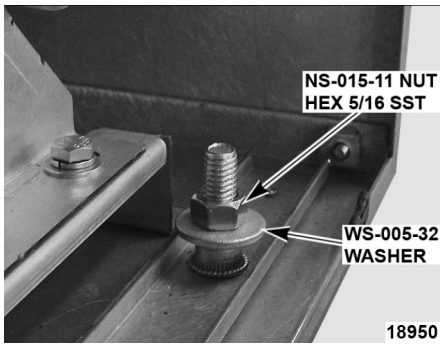

Fig. 8

7. Remove rear top panel mounting screws.



Fig. 9

8. Install top plate on top of bottom steamer aligning 1/4" diameter holes with top panel holes.
9. Install screws into back of top plate and steamer top panel loosely.
10. Drill a 1/4" diameter holes in steamer top panel on both left and right sides on front, using top plate as a template.

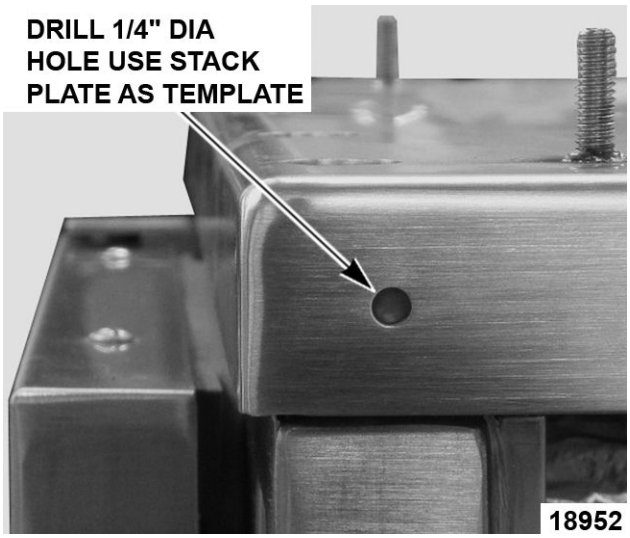

Fig. 10

11. Secure top plate loosely using supplied 10-24 x 7/8" screws and , 10-24 locking nuts.



Fig. 11

NOTE: Step 12 for Delime port only applies to C24EA3/EA5 & HC24EA3/EA5 models.

12. Drill a one inch (1") diameter hole in the top of upper steamer for Delime Port.

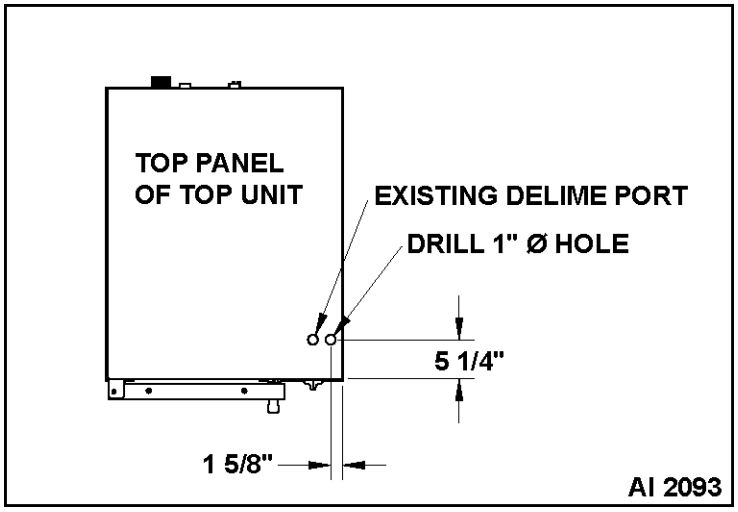

Fig. 12

13. Remove knock-out in bottom panel of top steamer.

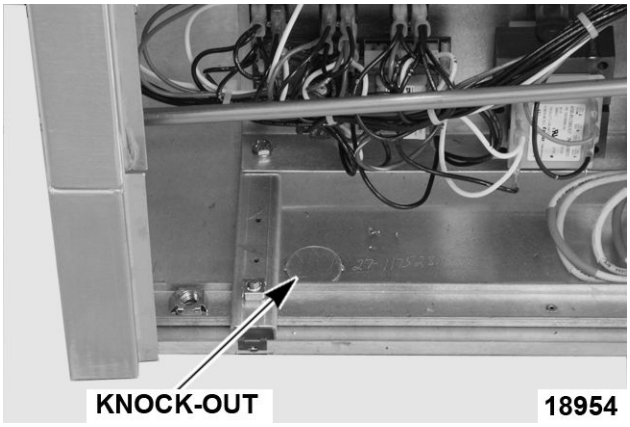

Fig. 13

14. Place top steamer on top plate aligning weld studs on top plate with steamer leg holes. Secure with 5/16"-18 Lock Nuts and 11/32" Washers.

NOTE: Step 15 for Delime port only applies to C24EA3/EA5 & HC24EA3/EA5 models.

15. Install delime port on top steamer panel.

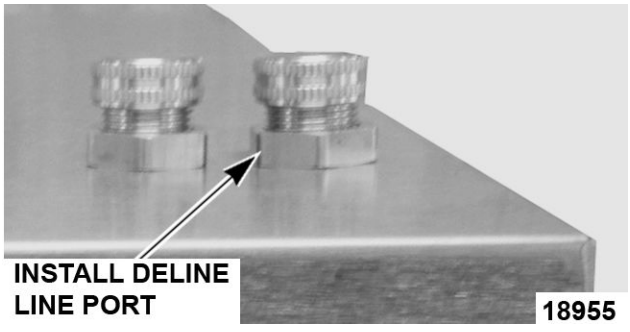

Fig. 14

C24EA3/5-BSC STEAMER MODELS ONLY

A. Remove ON-OFF handle from top steamer.



Fig. 15

B. Insert grommet in delime hose bracket.

C. Install delime hose bracket on cross brace of top steamer using Type B 6-20 drive screws and 13/64" washers.

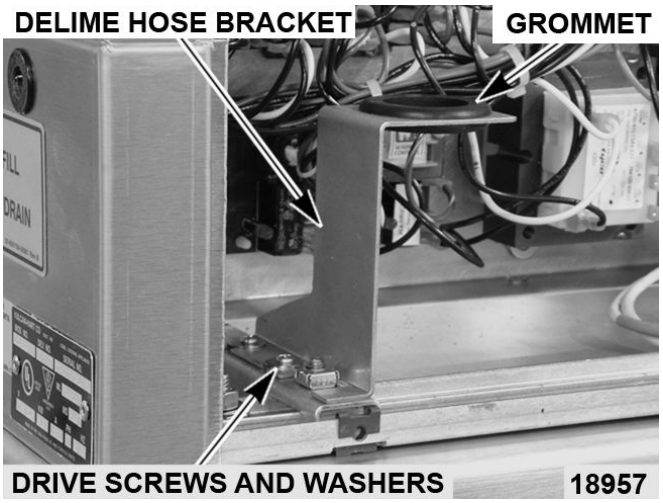

Fig. 16

D. Attach hose using supplied tension clamp to delime port.



Fig. 17

E. Thread hose through delime bracket and holes in panels.

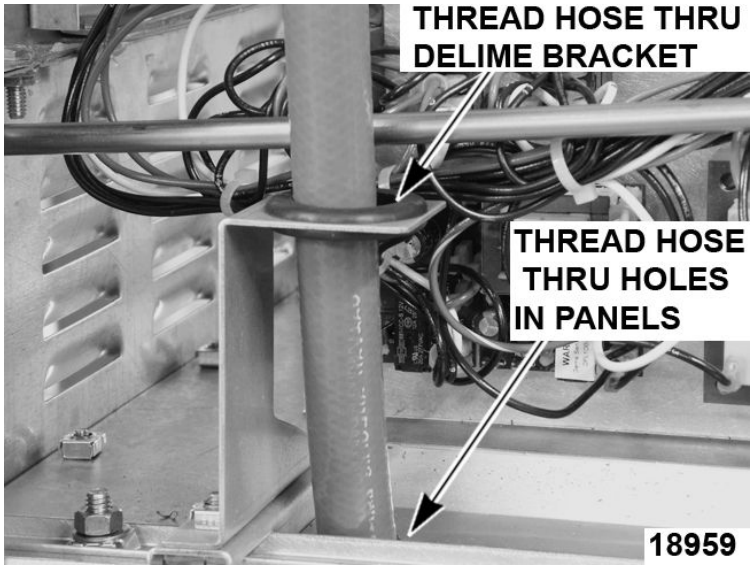

Fig. 18

F. Cut hose to length. Attach hose to tee with supplied tension clamp.

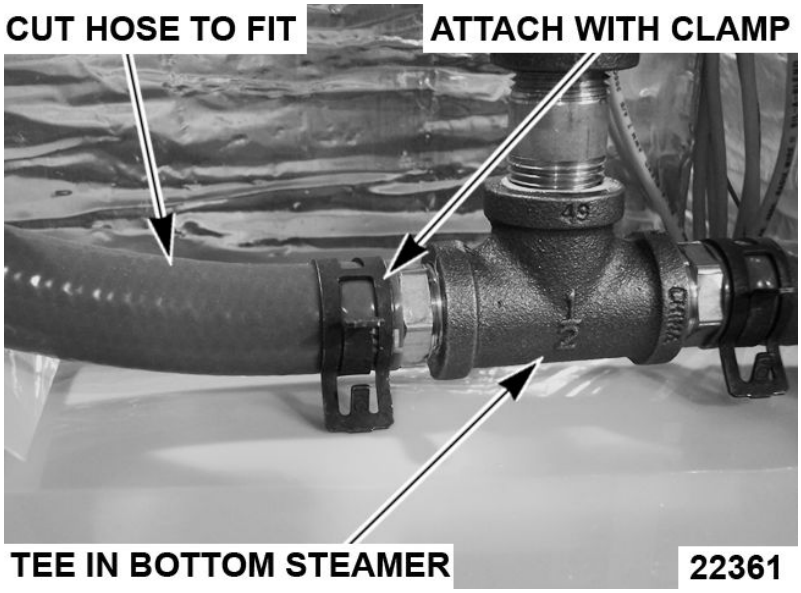

Fig. 19

G. Re-install ON-OFF handle in top steamer.

16. Install side panels on steamers.
17. Tighten all stack plate mounting screws.

NOTE: Step 18 and Step 19 apply to LWE steamers only

18. Mount 1 ½" diameter clamp on right side of flue, using existing bolt as shown in Fig. 20.



Fig. 20

19. Slide one inch (1 ½" I.D.) silicone hose over flue in bottom steamer. Route hose through loop clamp. Tighten as necessary.
20. Connect steamers to utilities.

NOTICE

Drains must be independent (for each steamer) to floor drain and not connected together.

NOTICE

Verify water pressure is 20-60 PSI.

C24EO3/EO5 & HC24EO3/EO5 STACKING KIT ASSEMBLY

1. Disconnect steamers from utilities if applicable.
2. Remove legs from both steamers.
   A. Save 4 feet for reuse if 6" Legs or Casters are not included with units.
3. Install feet, casters or 6" legs onto bottom of Stack Plate Base Weldment.

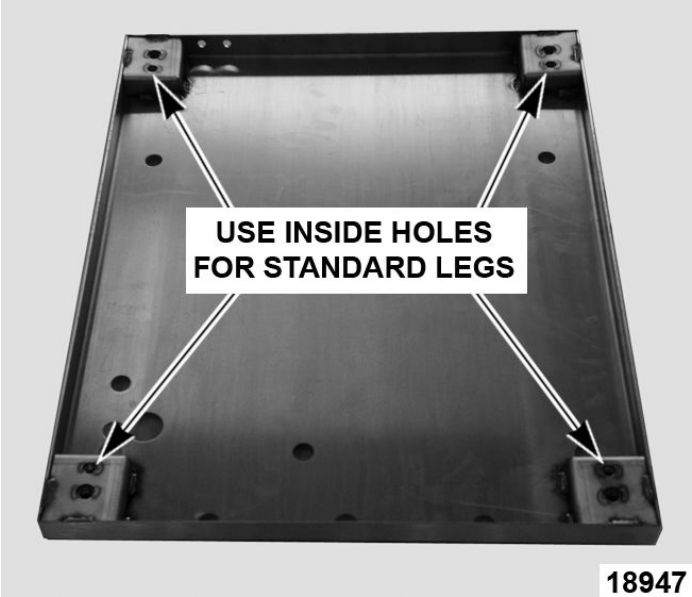

Fig. 21



Fig. 22

4. Remove left and right side panels from both steamers.

5. Place bottom steamer on the Stack Plate Base Weldment.
   A. Align four weld studs on base weldment with holes used for standard feet in bottom panel.
6. Secure steamer to stack base plate weld studs using 4 Lock Nuts NS-15-11 and Washers WS-005-32.
   A. Two studs are located on each side of steamer.

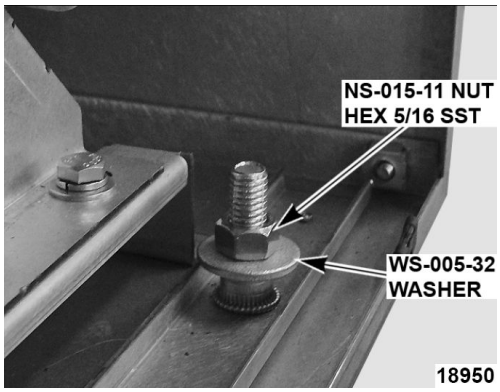

Fig. 23

7. Remove rear top panel screws and save.



Fig. 24

8. Place top plate on top of bottom steamer.
   A. Make sure the two 1/4" dia holes in rear lip of top plate are aligned with the top panel holes.
9. Replace screws into top plate and steamer top panel. Do not tighten completely.
10. Drill a 1/4" dia holes in steamer top panel on both the left front and right front side using top panel as a template.

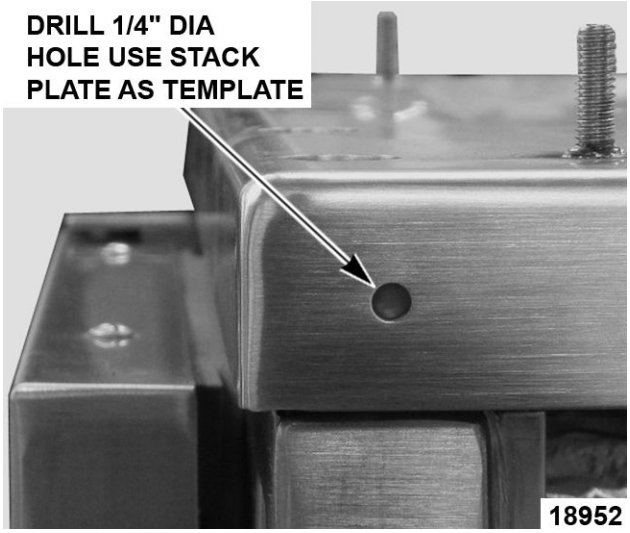

Fig. 25

11. Secure top plate to steamer top panel on front left and right sides. Do not tighten completely.
12. Place top steamer on stack plate.
    A. Align weld studs on stack plate with holes used for standard feet in bottom panel.
13. Secure steamer to stack plate weld studs using four 5/16"-18 nuts and 11/32" washers.
    A. Two studs on each side of steamer.
14. Reassemble side panels on both top and bottom steamers per service manual.
15. Tighten screws on sides and back of stack plate.
16. Mount 1 ½” diameter loop clamp using existing bolt, locate on right hand side of flue.
17. Slide 1” silicone hose over flue on bottom steamer. Route hose through loop strap. Tighten as necessary.



Fig. 26

18. Connect steamers to utilities.

NOTICE

Drains must be independent (for each steamer) to floor drain and not connected together.

NOTICE

Verify water pressure is 20-60 PSI.

19. Verify proper operation.